Notes:

1. Maximum Electric Current:

AWG	16	14		
AMP	18	30		

2. Maximum Electric Rating: 105°C 600 Volts Max
3. Insulation Material: Vinyl
4. Insulation Color: Blue
5. Terminal Material: Copper
6. Wire Range: 16-14 AWG (1.5-2.5mm²)
7. Terminal Surface Treatment: Tin Plated
8. Terminal Thickness: 0.80mm

Standard (Metric)

1.11" (28.3mm)
0.43" (11mm)
0.45" (11.5mm)
0.47" (12mm)
0.25" (6.4mm)
0.09" (2.3mm)
0.18" (4.5mm)

Tolerances

(Unless Otherwise Specified)

CATEGORY	Vinyl Insulated Ring Terminals	SCALE	4/1
PART #	RVE2-6	SHEET	1-3
MATERIAL	Tin-Plated Copper	PAGE	10F2
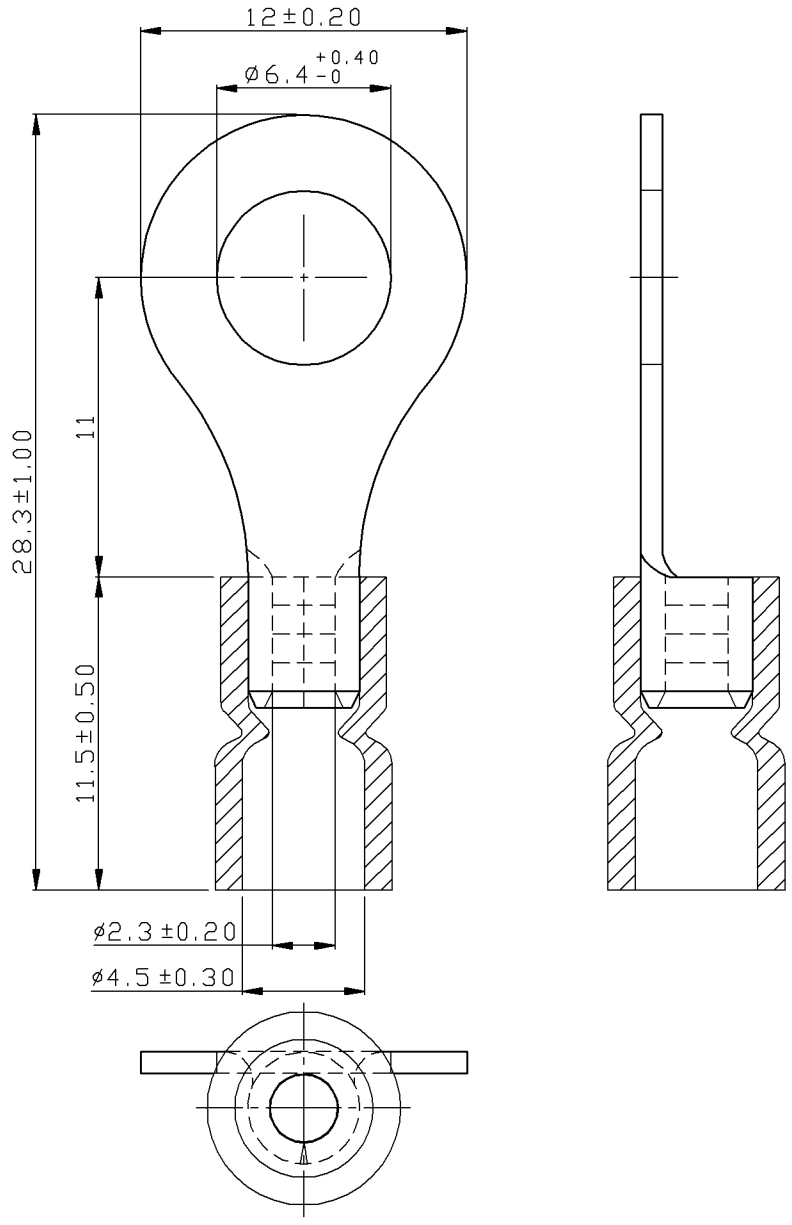
MIROMAR