Notes:

1. Maximum Electric Current:

AWG	16	14		
AMP	10	13		

2. Maximum Electric Rating: 75°C 300 Volts Max
3. Insulation Material: Vinyl
4. Insulation Color: Blue
5. Terminal Material: Brass
6. Wire Range: 16-14 AWG (1.5-2.5mm²)
7. Terminal Surface Treatment: Tin Plated
8. Terminal Thickness: 0.35mm
9. Nema Tab: 0.020" x 0.205" (0.5mm x 5.20mm)

Standard (Metric)	Tolerances (Unless Otherwise Specified)
0.73" (18.5mm) 0.39" (10mm) 0.23" (5.8mm) 0.22" (5.7mm) 0.09" (2.3mm) 0.18" (4.5mm)	

CATEGORY	Vinyl Insulated Female Quick Disconnects	SCALE	4/1
PART #	FDV2-205(5)	SHEET	1-1
MATERIAL	Tin-Plated Brass	PAGE	10F2
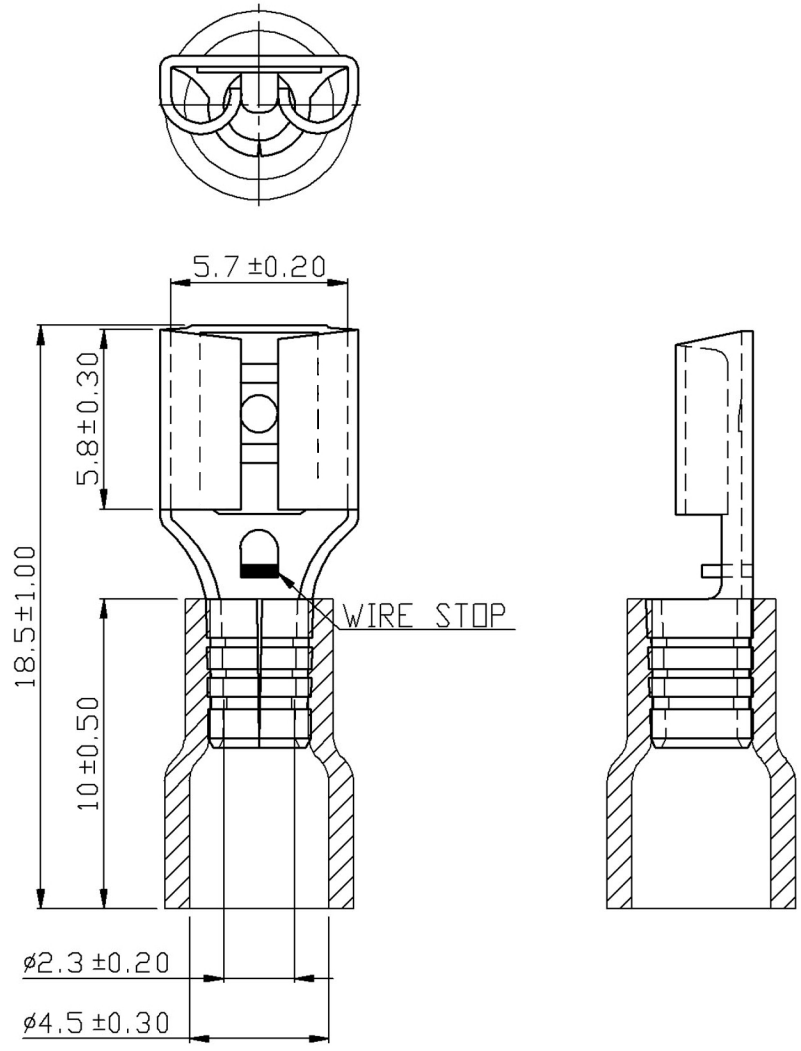
MIROMAR